FLOWLAB FLOW RATE TEST RESULTS

FLOW TESTED LAB

Client:

Aquaknight Industries Ltd
33 Leslie Avenue
Sandringham
Auckland 1025
New Zealand

Date of Test:	26-Jan-2023
Date of Certificate:	31-Jan-2023
Certificate Number:	FL 143
Certificate Expiry:	31-Jan-2025

Product Details

Model Number:	3100.183.1	Model Name:	RD SE80 SF
Inlet Size (mm):	80	Outlet Size (mm):	80

Description: Roof Drain Side Exit 80mm Small Flange

Testing Conditions:

Drain: PVC flange mounted flush into test plinth (datum)
Clamp Ring and grate installed
Discharge to atmosphere

Overflow: Overflow insert installed (datum)
Overflow hat and Sofiit Trim installed
Discharge to atmosphere

Grate Drawing

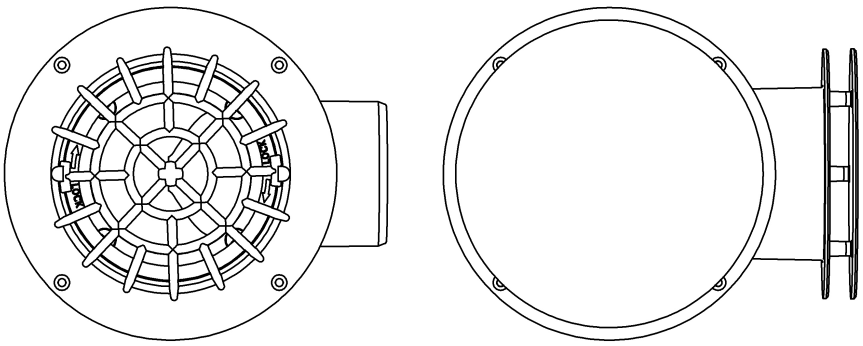

Installed Drawing

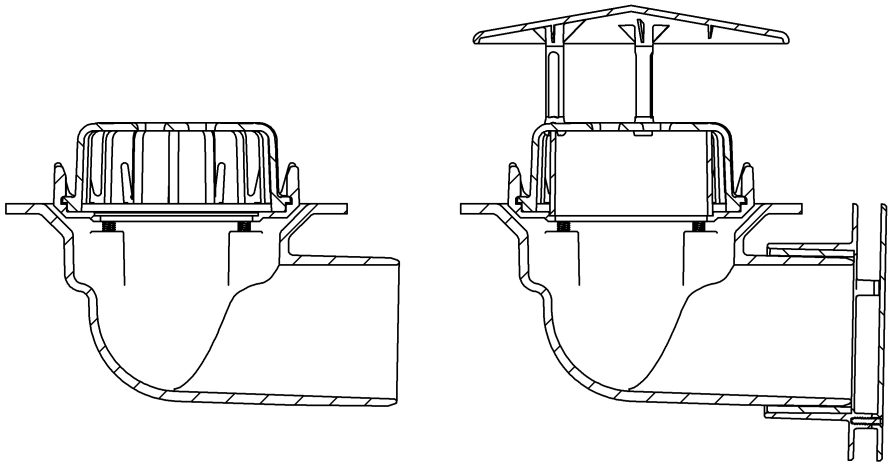

FLOWLAB LTD | PO Box 41-049, Mt Roskill, Auckland 1041, New Zealand
Address: 33 Leslie Ave, Sandringham, Auckland 1025
Phone: +64 9 832 2214 | **info@flowlab.co.nz** | **www.flowlab.co.nz**
© Flowlab Ltd 2020

Flow Characteristic Curve

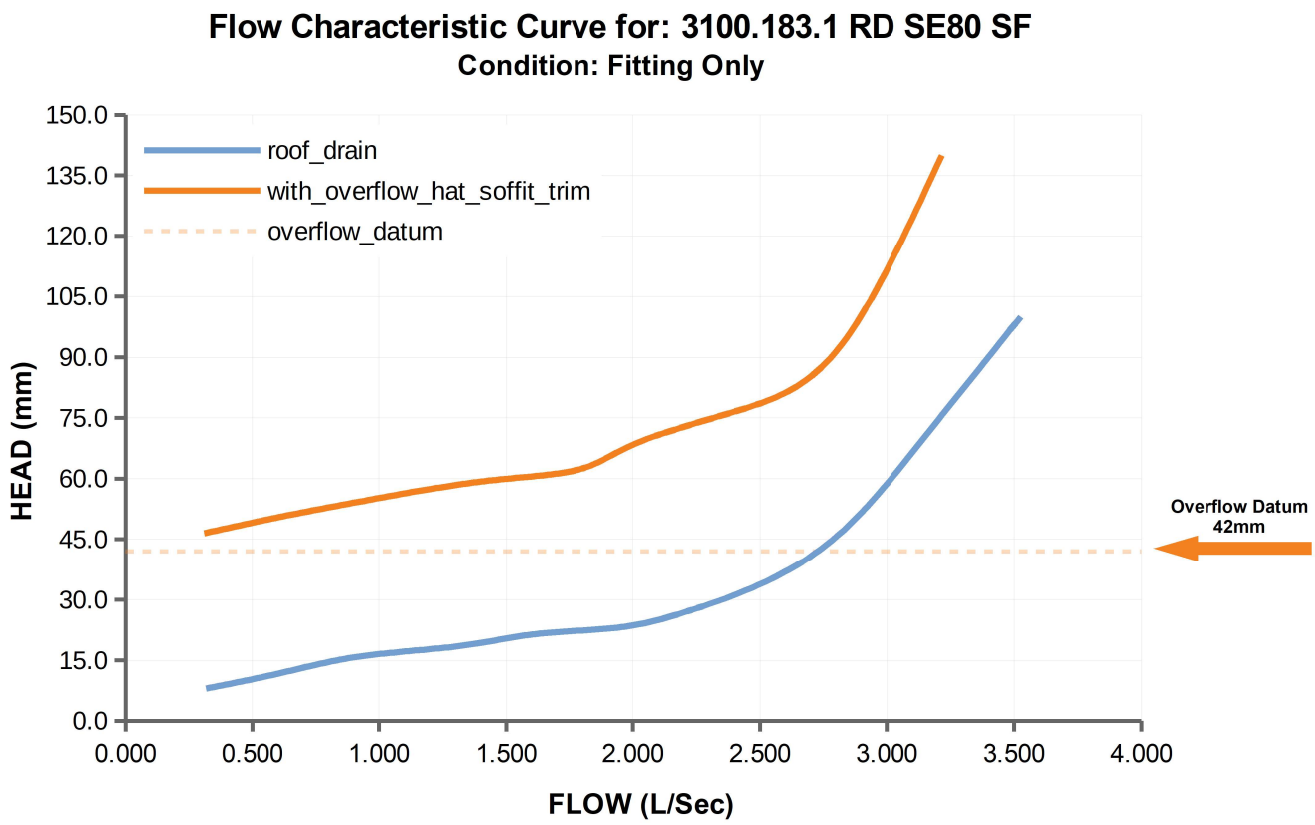

Roof Drain

Flow Rate (L/sec)	Water Head (mmH2O)
0.317	8.0
0.623	12.0
0.930	16.0
1.310	18.5
1.617	21.5
1.927	23.0
2.233	27.5
2.717	41.5
3.120	68.0
3.527	100.0

Overflow/Hat/Soffit Trim

Flow Rate (L/sec)	Water Head (mmH2O)
0.310	46.5
0.607	50.5
0.897	54.0
1.207	57.5
1.507	60.0
1.800	62.5
2.023	69.0
2.423	77.0
2.820	93.0
3.217	140.0

FLOW TESTED LAB
FLOWLAB LTD | PO Box 41-049, Mt Roskill, Auckland 1041, New Zealand
Address: 33 Leslie Ave, Sandringham, Auckland 1025
Phone: +64 9 832 2214 | **info@flowlab.co.nz** | **www.flowlab.co.nz**
© Flowlab Ltd 2020