FLOWLAB FLOW RATE TEST RESULTS

FLOW TESTED LAB

Client:

Aquaknight Industries Ltd
33 Leslie Avenue
Sandringham
Auckland 1025
New Zealand

Date of Test:	20-Dec-2022
Date of Certificate:	09-Feb-2023
Certificate Number:	FL 128
Certificate Expiry:	09-Feb-2025

Product Details

Model Number:	3100.193	Model Name:	RD BE80 BF
Inlet Size (mm):	100	Outlet Size (mm):	80

Description: Roof Drain BottomExit 80mm Big Flange

Testing Conditions:

Drain: PVC flange mounted flush into test plinth (datum)
Clamp Ring and grate installed
Discharge to atmosphere

Overflow: Overflow insert installed (datum)
Overflow hat and Sofiit Trim installed
Discharge to atmosphere

Grate Drawing

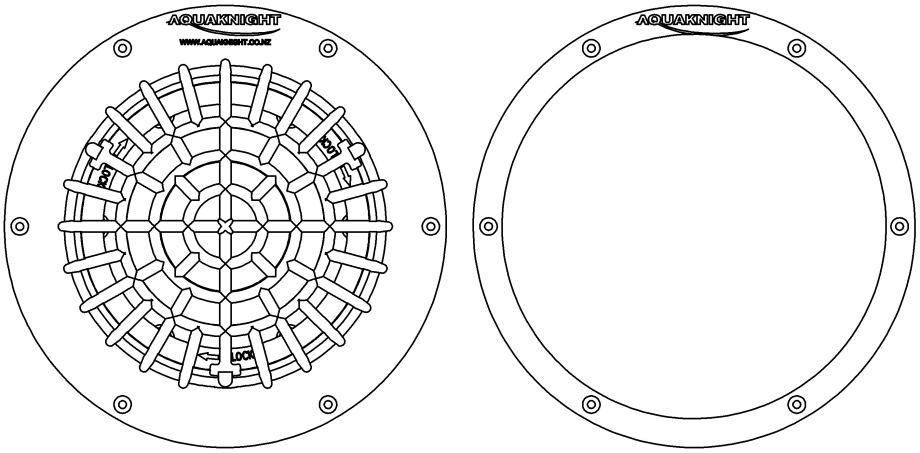

Installed Drawing

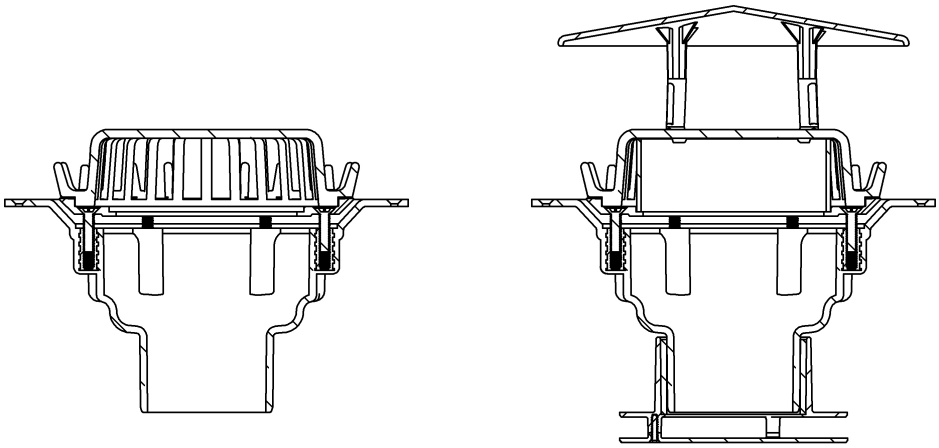

FLOWLAB LTD | PO Box 41-049, Mt Roskill, Auckland 1041, New Zealand
Address: 33 Leslie Ave, Sandringham, Auckland 1025
Phone: +64 9 832 2214 | **info@flowlab.co.nz** | **www.flowlab.co.nz**
© Flowlab Ltd 2020

Flow Characteristic Curve

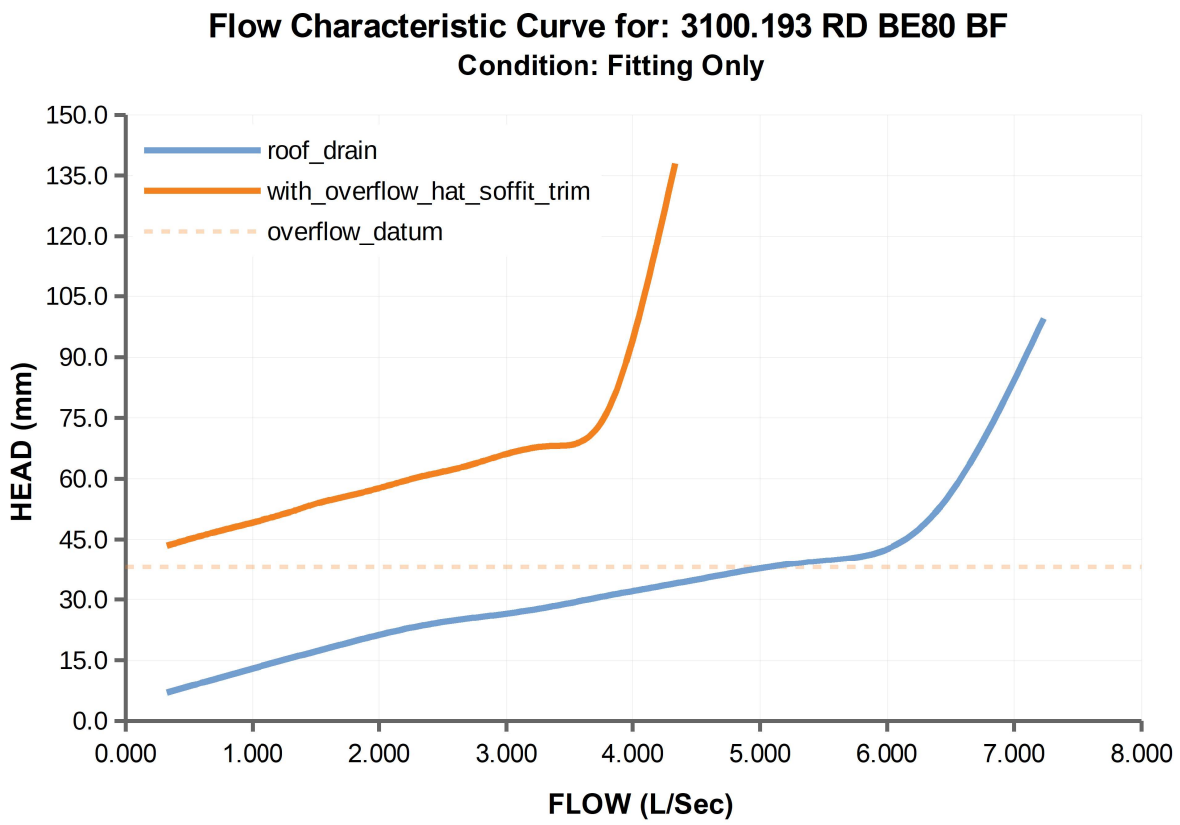

Roof Drain

Flow Rate (L/sec)	Water Head (mmH2O)
0.323	7.0
1.010	13.0
1.720	19.0
2.413	24.0
3.117	27.0
3.813	31.0
4.513	35.0
5.423	39.5
6.337	50.0
7.233	99.5

Overflow/Hat/Soffit Trim

Flow Rate (L/sec)	Water Head (mmH2O)
0.323	43.5
0.720	47.0
1.213	51.0
1.520	54.0
1.917	57.0
2.323	60.5
2.723	63.5
3.310	68.0
3.823	78.0
4.333	138.0

FLOW TESTED LAB
FLOWLAB LTD | PO Box 41-049, Mt Roskill, Auckland 1041, New Zealand
Address: 33 Leslie Ave, Sandringham, Auckland 1025
Phone: +64 9 832 2214 | **info@flowlab.co.nz** | **www.flowlab.co.nz**
© Flowlab Ltd 2020